SIEMENS

Data sheet 3NE8227-3MK

Figure similar

SITOR fuse link, with slotted blade contacts, NH1, In: 250 A, aR, Un AC: 690 V, Un DC: 440 V, front indicator

Model	
product brand name	SENTRON
product designation	SITOR fuse link
design of the product	With slotted blade contacts
design of an identification indicator	front indicator
design of the switching contact	with slotted knife blade contacts for screw mounting. mounting dimensions: 80 mm
design of the fuse link	SITOR, LV HRC design
General technical data	
size of fuse system according to EN 60269-1	NH1
operating class of the fuse link	aR
type of voltage of the operating voltage	AC/DC
Supply voltage	
supply voltage	
● at AC	690 V
● at DC	440 V
Breaking Capacity	
switching capacity current	
● at DC according to IEC 60947-2 rated value	50 kA
● according to IEC 60947-2 rated value	100 kA
Dissipation	
power loss [W]	53.5 W
power loss [W]	
● for rated value of the current at AC in hot operating state per pole	53.5 W
● maximum	53.5 W
Product details	
product description	with bolt-on links, silver-plated
accessories included	no
Mechanical Design	
mounting position	Any, preferably vertical
Net Weight	0.412 kg
Environmental conditions	
ambient temperature during operation	
● minimum	-20 °C
● maximum	50 °C
environmental category	-20 to +50 at 95% relative humidity
Approvals Certificates	
General Product Approval	**other**

Subject to change without notice
© Copyright Siemens

other	Environment	
Confirmation	Environmental Confirmations	Environmental Confirmations

Further information

Information on the packaging
https://support.industry.siemens.com/cs/ww/en/view/109813875
Information for data generation and storage
https://support.industry.siemens.com/cs/ww/en/view/109995012
Information- and Downloadcenter (Catalogs, Brochures,…)
http://www.siemens.com/lowvoltage/catalogs
Industry Mall (Online ordering system)
https://mall.industry.siemens.com/mall/en/en/Catalog/product?mlfb=3NE8227-3MK
Service&Support (Manuals, Certificates, Characteristics, FAQs,...)
https://support.industry.siemens.com/cs/ww/en/ps/3NE8227-3MK
Image database (product images, 2D dimension drawings, 3D models, device circuit diagrams, ...)
http://www.automation.siemens.com/bilddb/cax_en.aspx?mlfb=3NE8227-3MK
CAx-Online-Generator
http://www.siemens.com/cax
Tender specifications
https://www.siemens.com/specifications

Subject to change without notice
© Copyright Siemens

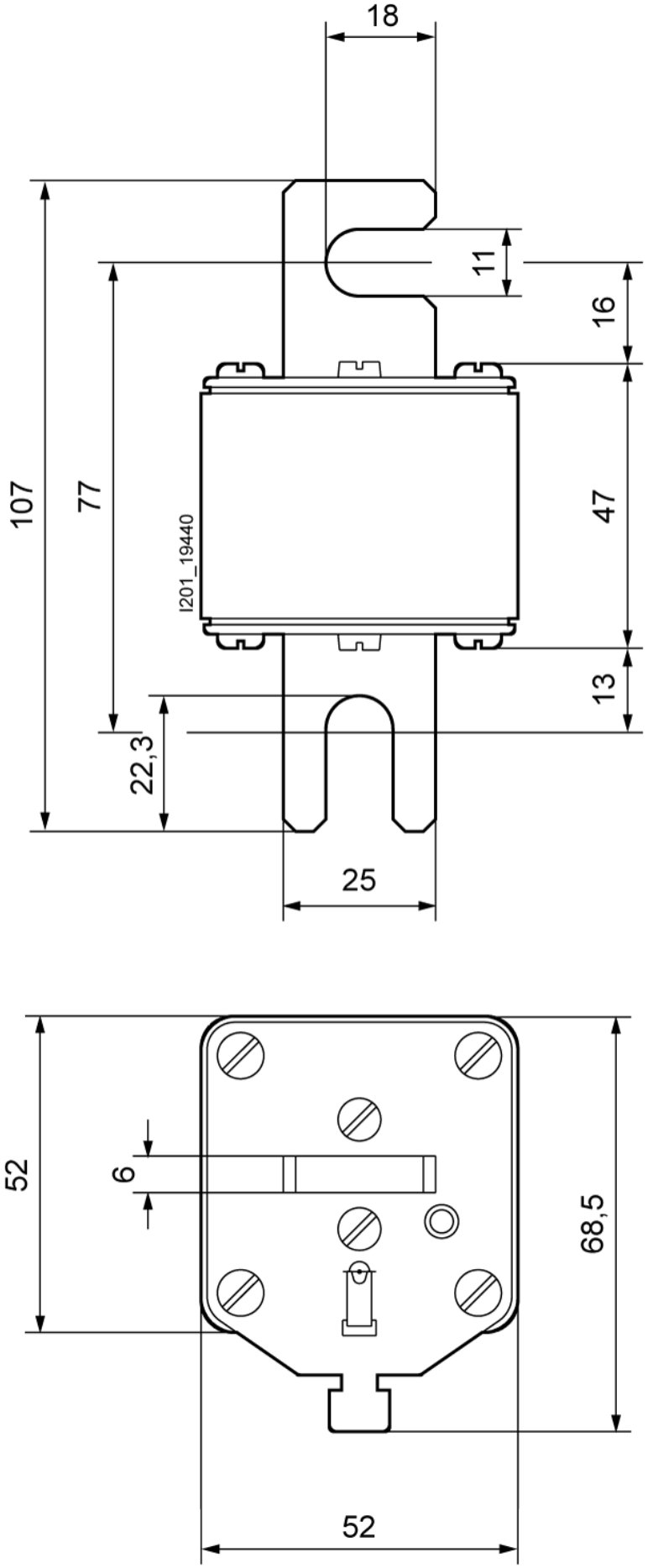

last modified: 4/11/2025

Subject to change without notice
© Copyright Siemens

Subject to change without notice
© Copyright Siemens

Subject to change without notice
© Copyright Siemens